USED ON	N.H.ASSY
VTFO-60000	

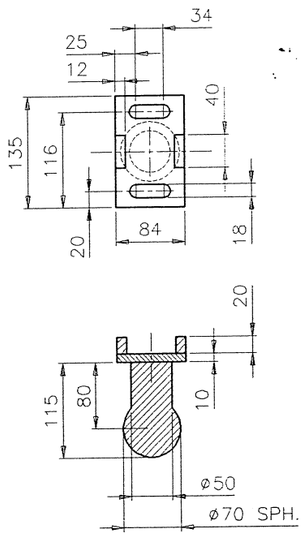

ITEM 1

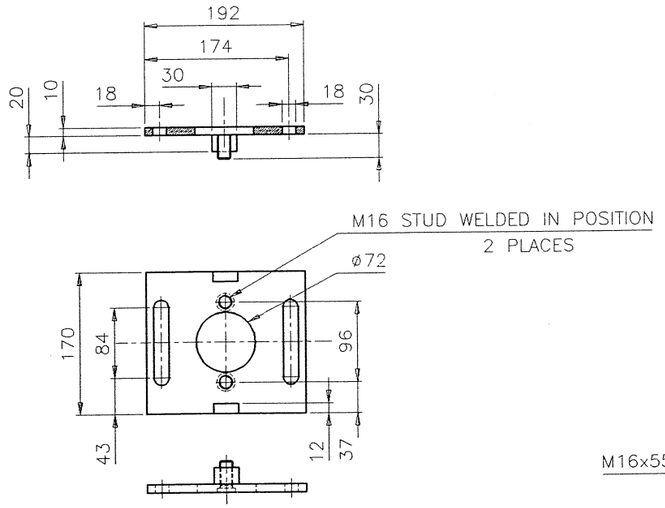

ITEM 2

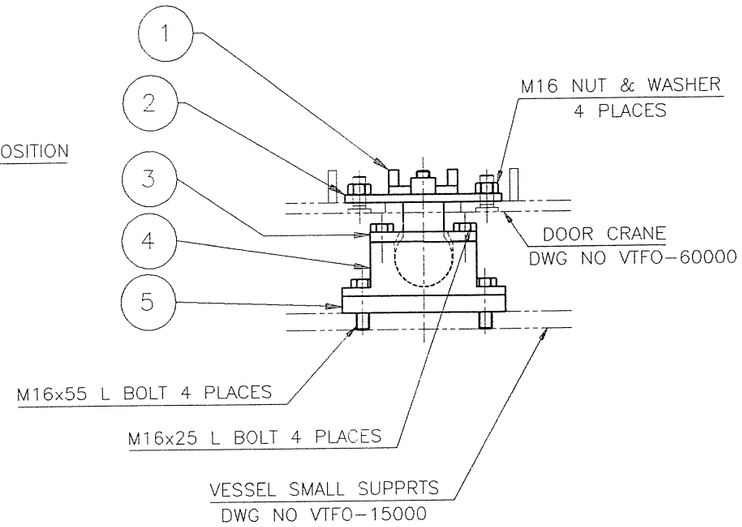

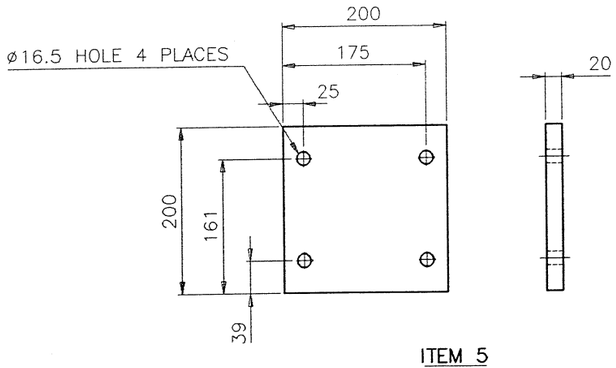

ITEM 5

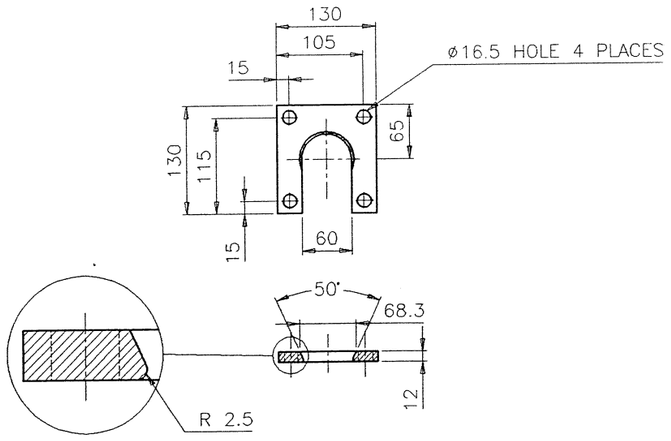

ITEM 3

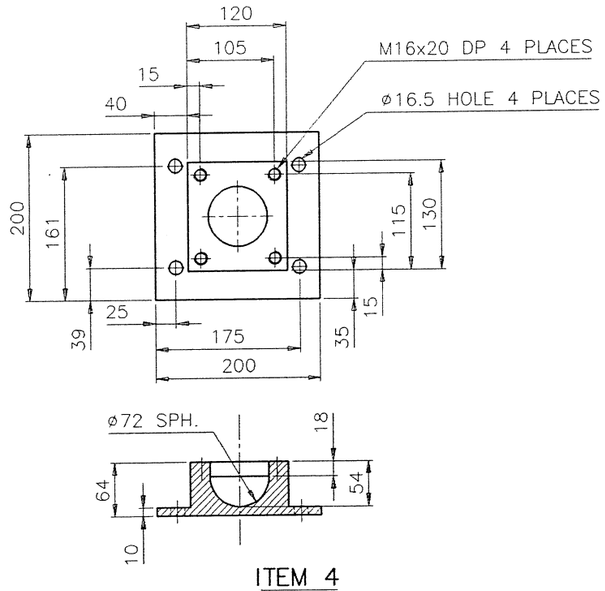

ITEM 4

NOTES: (UNLESS OTHERWISE STATED)		MATERIAL:	GENERAL TOLERANCES:
1) REMOVE ALL BURRS & SHARP EDGES TO 0,5x45° MAX. 2) SCREW THREADS TO ISO 261 3) SURFACE TEXTURE: 3,2 (Ra TO ISO 1302)	4) ALL INTERNAL RADII 0,3 MAX.	MILD STEEL	X +-0,5 X,X +-0,2 X,XX +-0,05 ANGLES +-1°

DRAWING STATUS	ACTIVE:	SIGN:	DATE:
INFORMATION ONLY			
FOR 3rd. PARTY APPROVAL			
PERMIT MATERIAL ORDER			
FOR MANUFACTURE			
AS BUILT			
SUPERSEDED			

REVISION DETAILS	ISS	C/NOTE	DRAWN	CHECK	APPR	P.OFF.	DATE
	A	–	WB				92-05-06

TO SABS 0111

DISC NO/FILE NAME: VTFOA60D

TITLE : TOP INTERFACE

ISSUE A

DRG NO : VTFO-60020-122 SHT 1 OF 1

SCALE : 1:5 WHEN PLOTTED ON UNLESS OTHERWISE STATED A2